Efficiency, Equity and Equality

Tony Culyer
IHPME (Toronto) and CHE (York UK)
tony.culyer@york.ac.uk

Not considered here…

Many principles of equity are worthy of exploration and clarification:

- equity in health care financing
- equity in the ownership of health care resources
- equity in accessing career opportunities in health care
- equity in policies concerning the non-health care determinants of health
  - like the equity of the distribution of purchasing power
  - good quality housing
  - good social care
  - clean air
  - workplace safety
  - equity in the health care workforce
  - political influence
- equity in processes of health care (e.g. issues of accountability - whose and to whom and for what?), transparency of decisions (why were decisions made as they were, by whom, with what evidence in support and what values embodied?) and participation (who may participate in decision making at various levels from the doctor-patient decisions to public policy decisions, who may be consulted, who has a vote or a veto, who may appeal a decision?).

My topics

- distribution of health (what is fair and what equality is fair?)
- What are the candidates for judging equity?
- efficiency in the production of health (what is effective and what is efficient?)
- are efficiency and equity inherently in conflict?

Where I come from – extra-welfarism

- extra-welfarism not welfarism; it's messy
- extra like 'extra-marital relations' are extra, i.e. additional, beyond, outside (e.g. to include concerns about distributive justice)
- extra also like a newspaper 'extra', e.g. a special edition
- special in that (for example):
  - Individual preferences are not necessarily taken as the base from which social preferences are constructed
  - Policy preferences may be validly expressed by accountable public agents
  - Policy objectives are cast in concrete terms (like 'health promotion') rather than utilitarian generalities (like 'welfare' or 'utility')
  - Processes, deliberation and consultation are part of the analysis and the evaluation of policies
- equity counts no less than efficiency and is also to be defined, measured and analysed with no less rigour
- plus – I don't want to discard most of the insights that economics can bring and the analytical tricks, theoretical and empirical, it can deploy

Models

- Radical simplifications
  - away with irrelevant clutter!
  - retain barest of essentials
  - designed for a purpose – to elucidate, to estimate, to forecast/predict
- Toys
  - to play with!
  - to adapt for new purposes
  - to explore assumptions
  - to add complexity

The health frontier (efficiency and inefficiency)

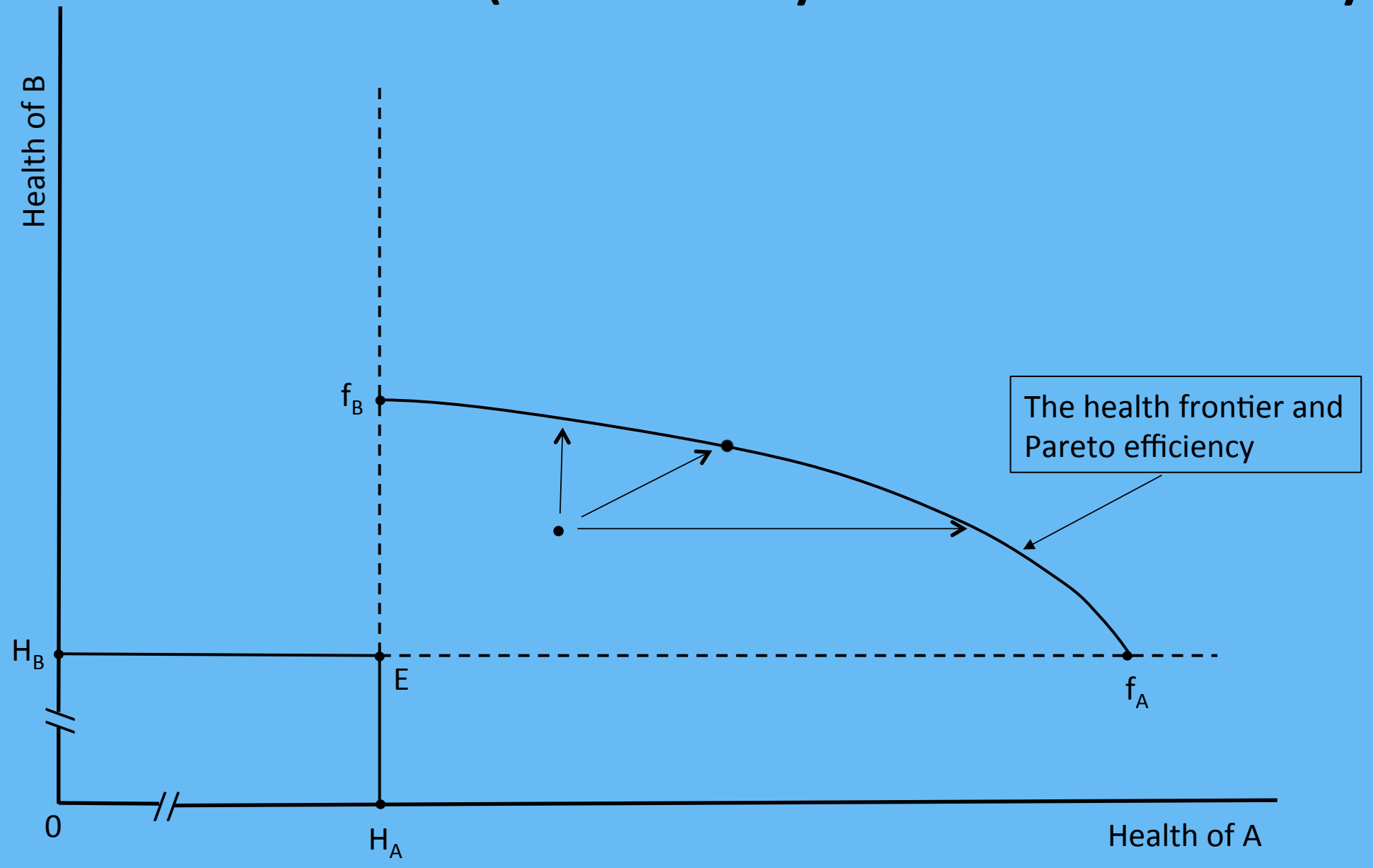

Constructing the health frontier

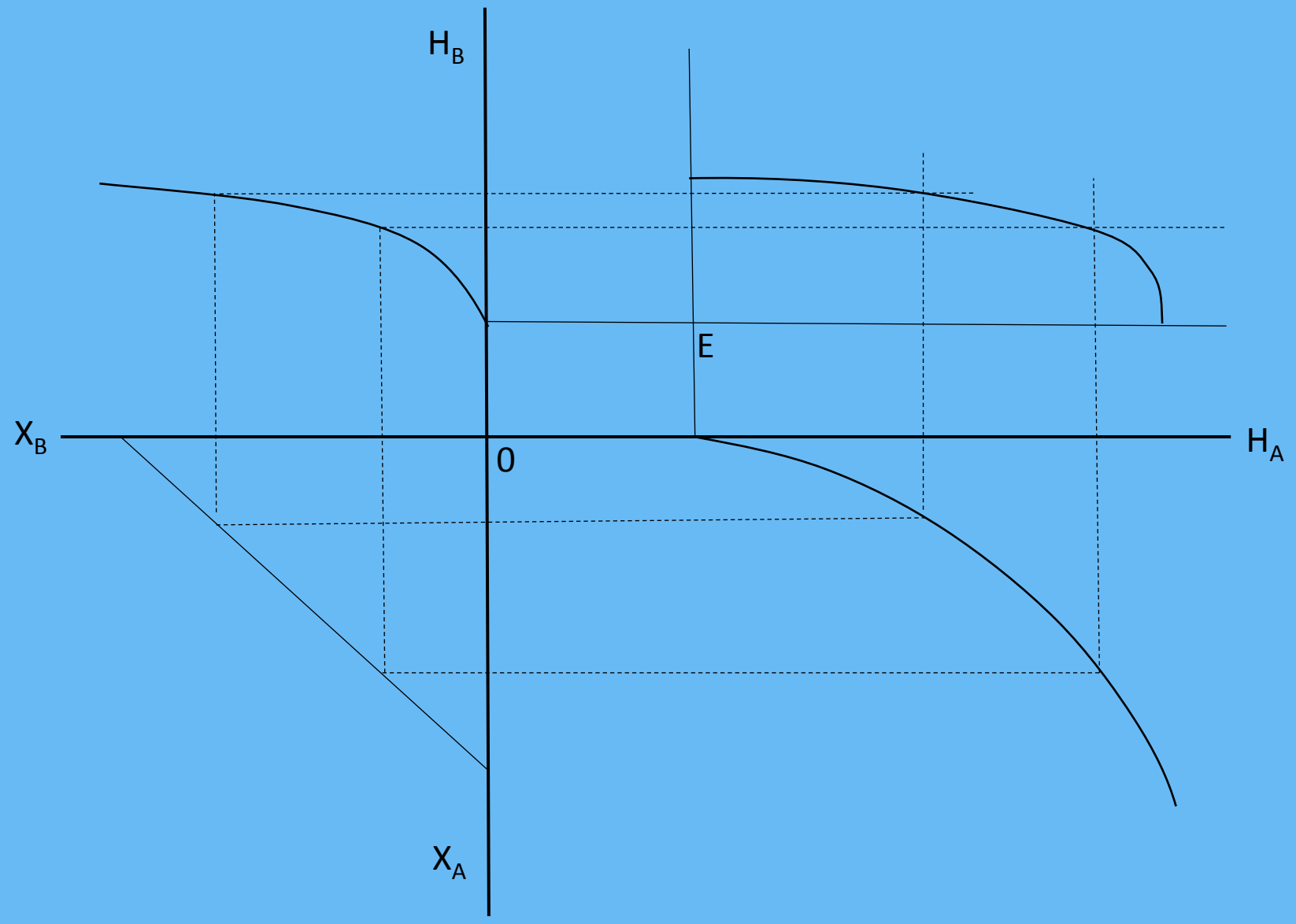

The health frontier (equity = equal health)

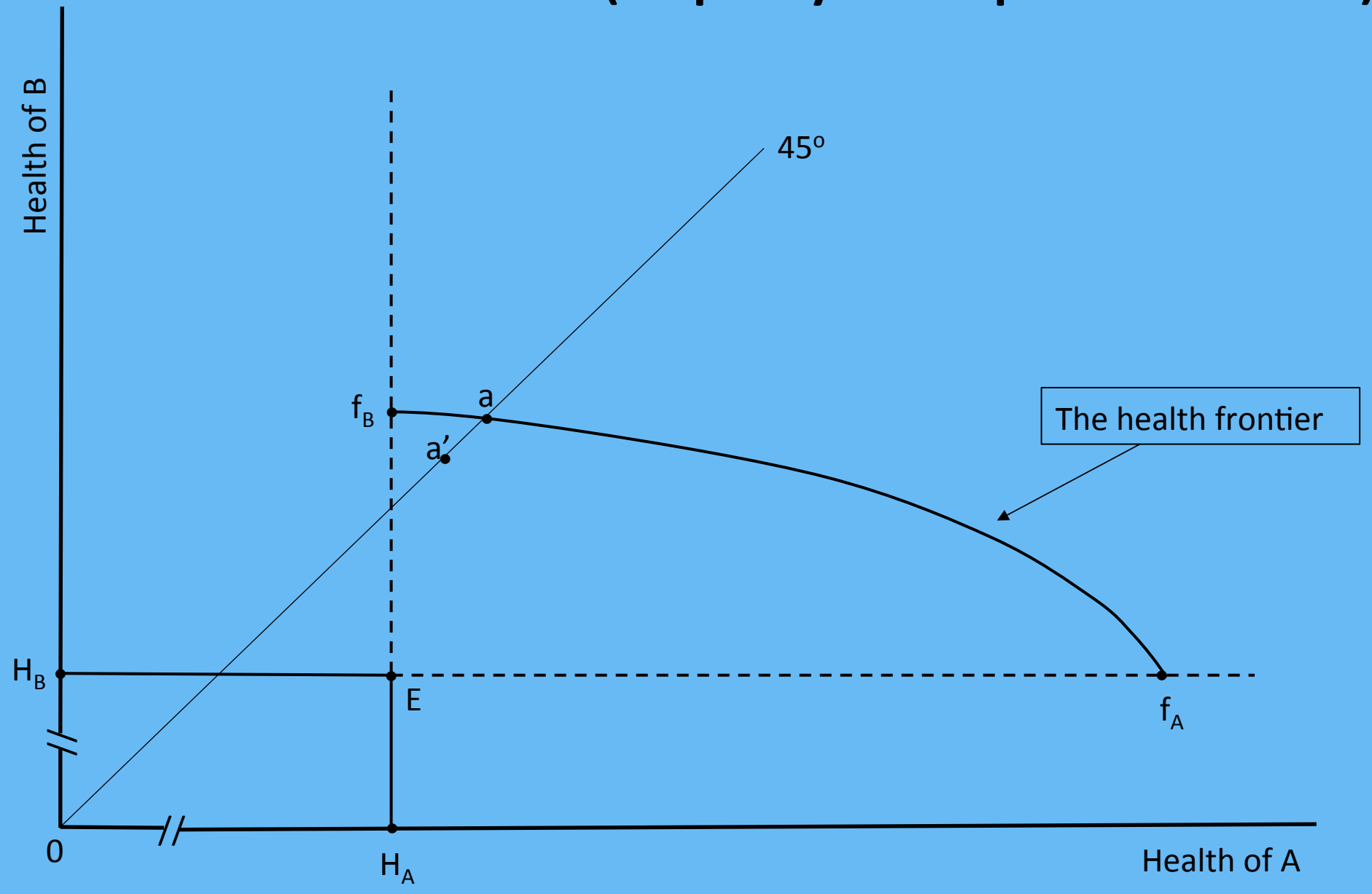

Equity = equal health gain

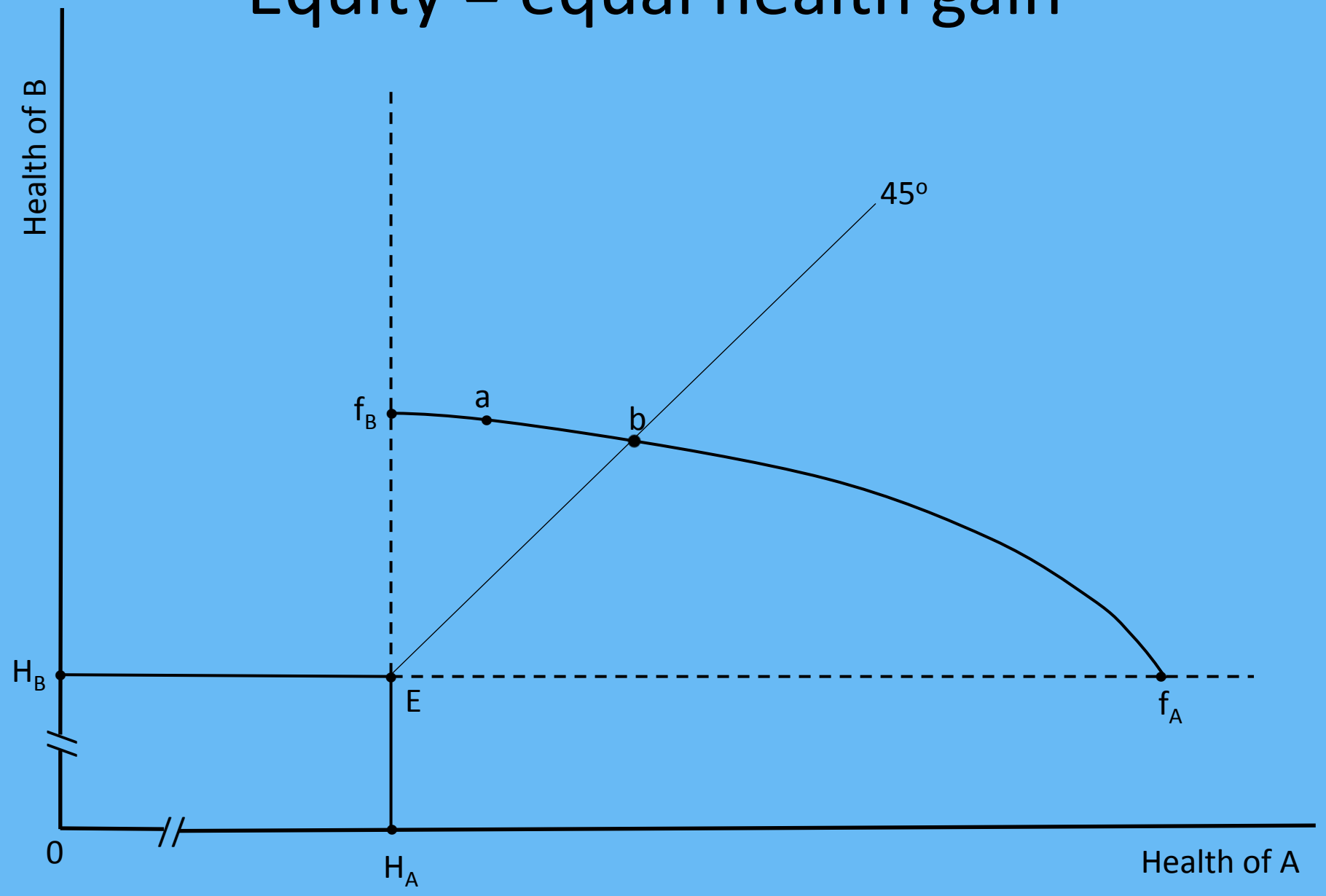

Equity = QALY=QALY=QALY

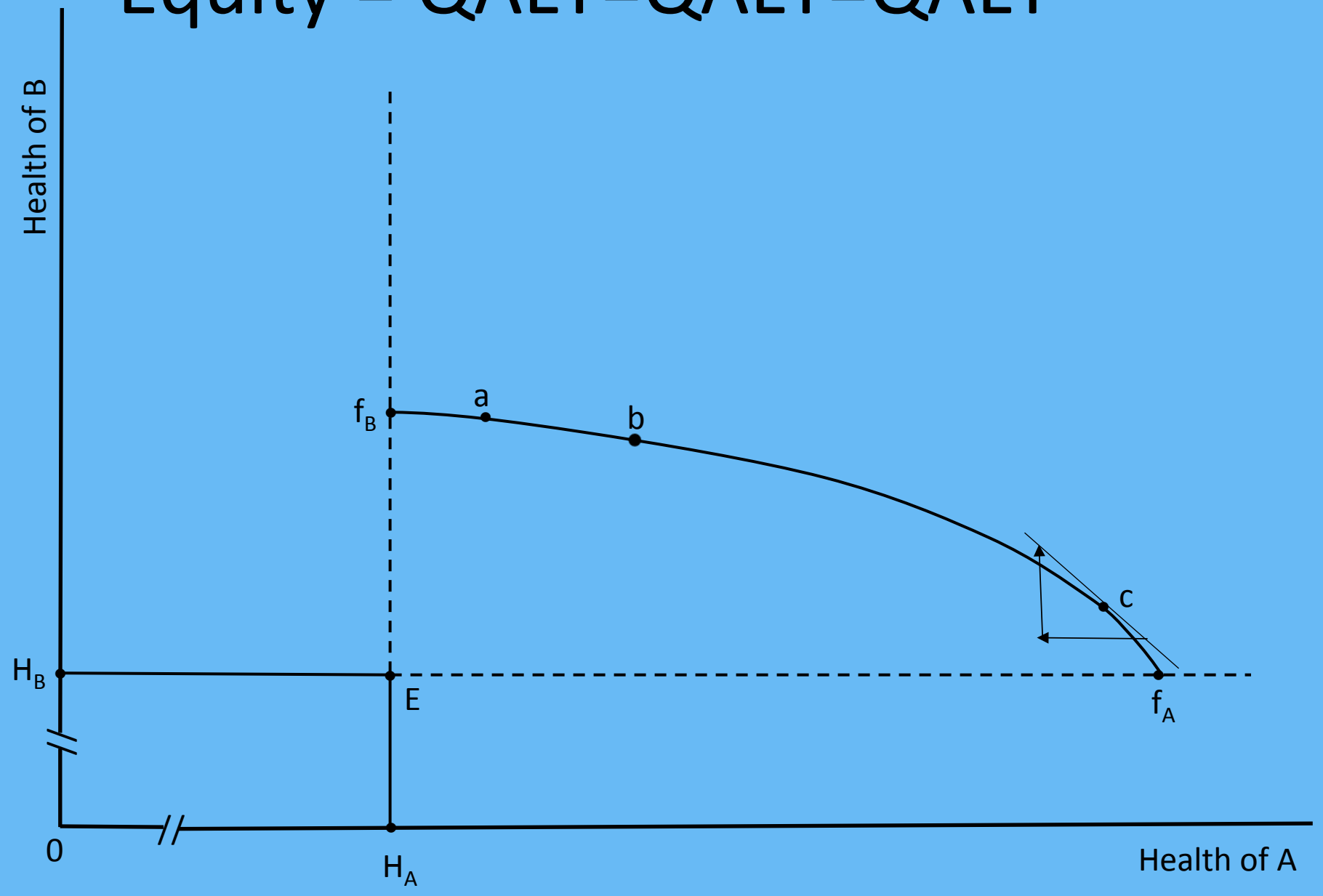

Equity = maintaining initial distribution of burden

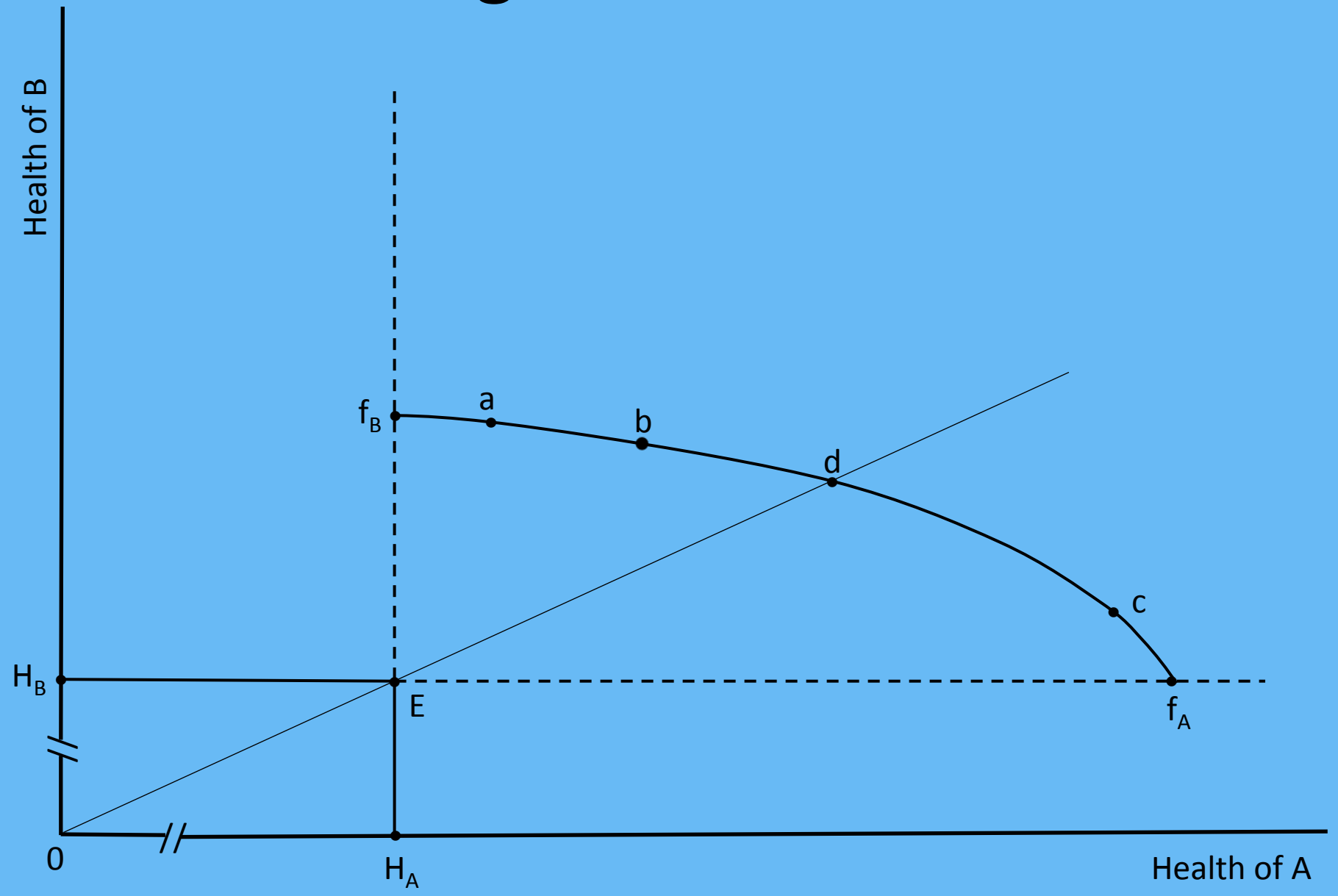

Equity = distribution in proportion to need

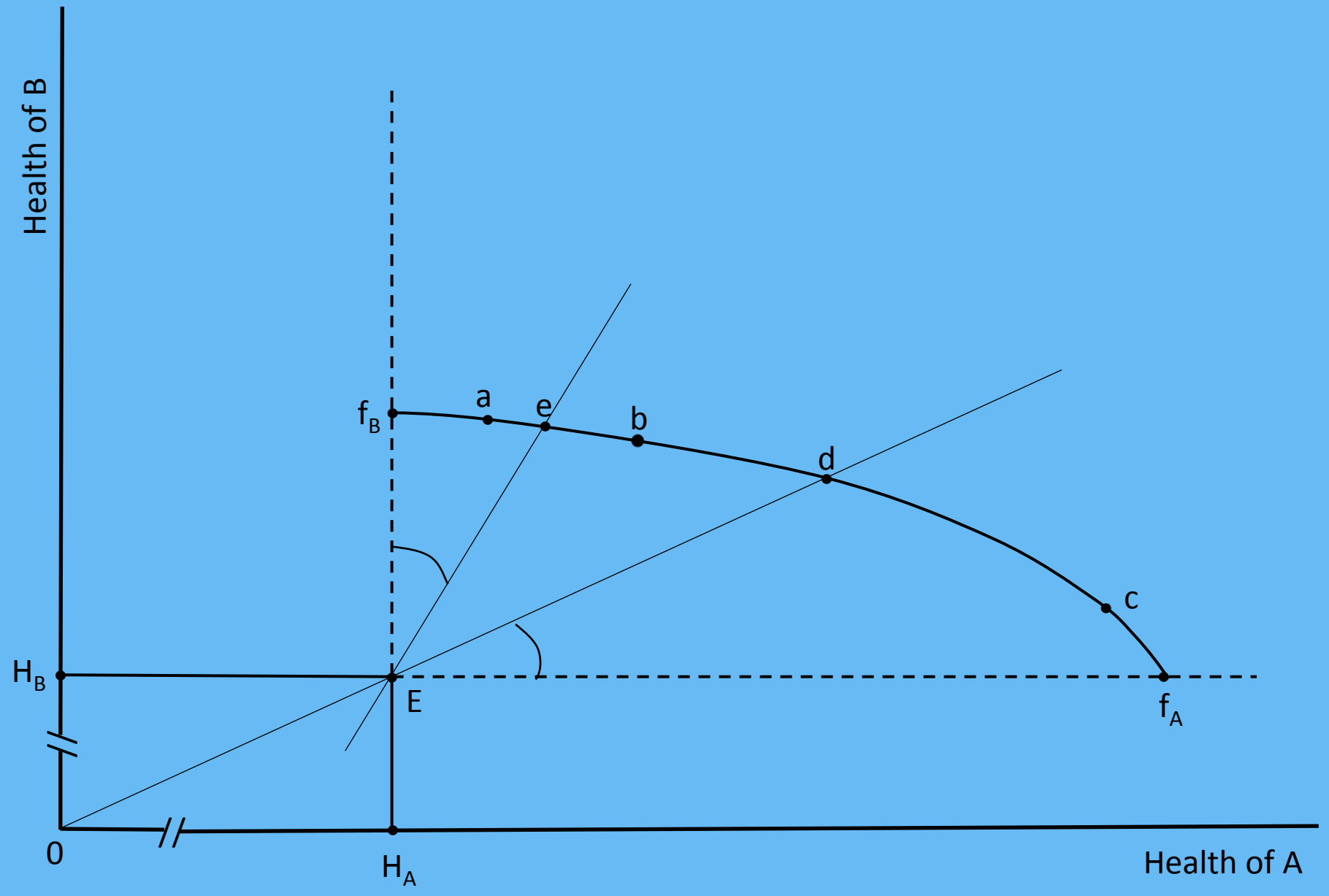

Equity = equal shares of resource

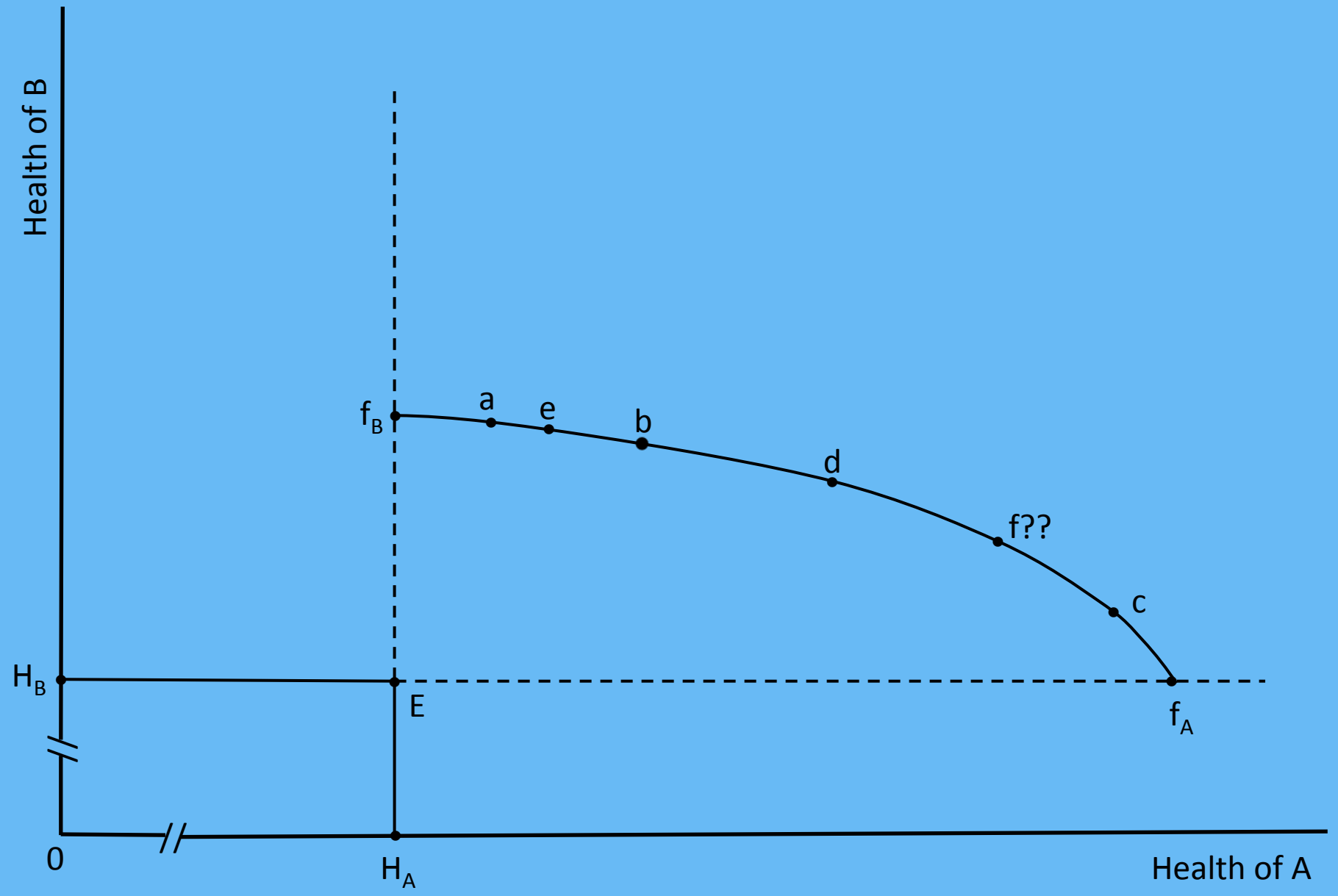

Constructing the health frontier

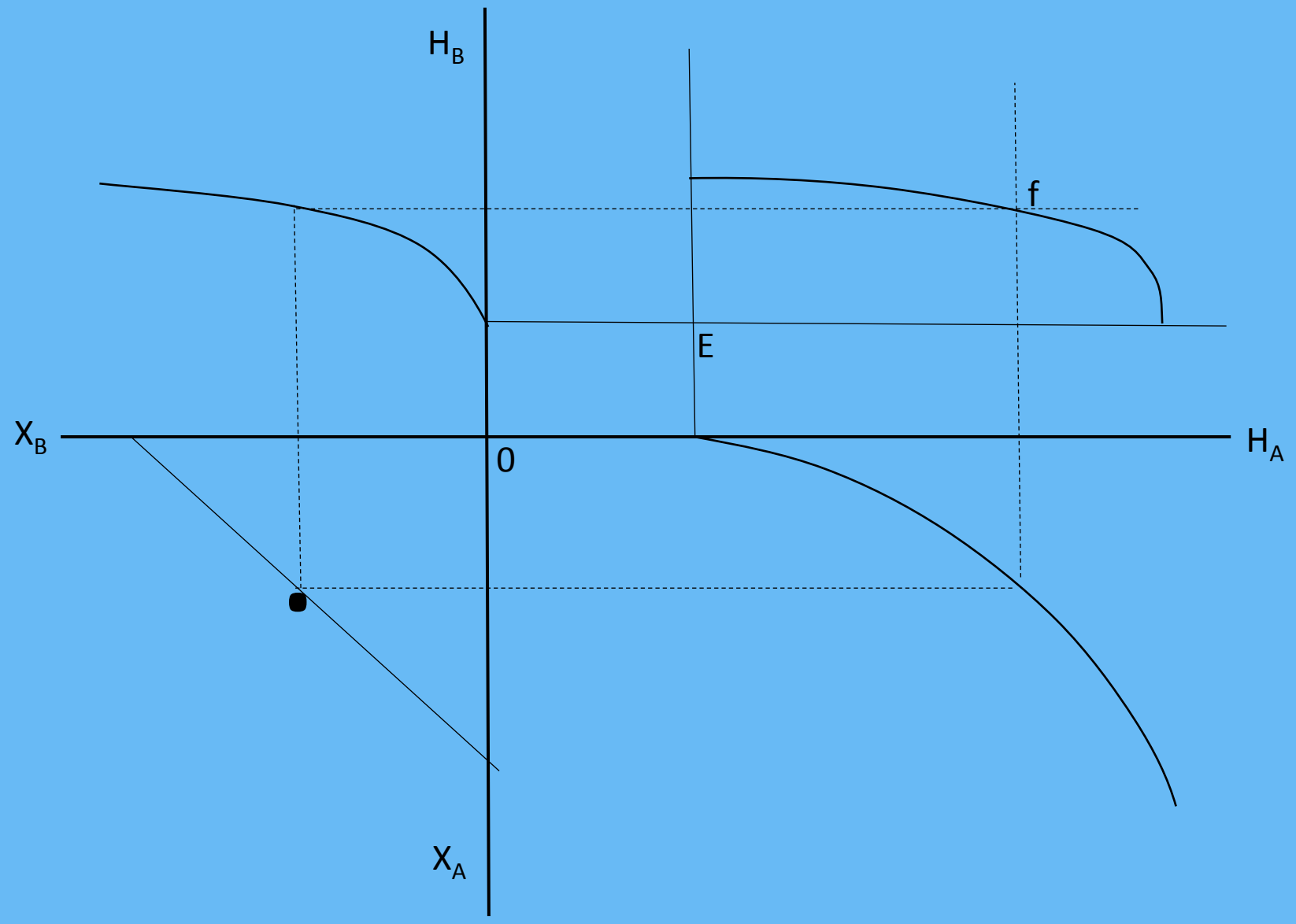

Equity = equal shares of resource

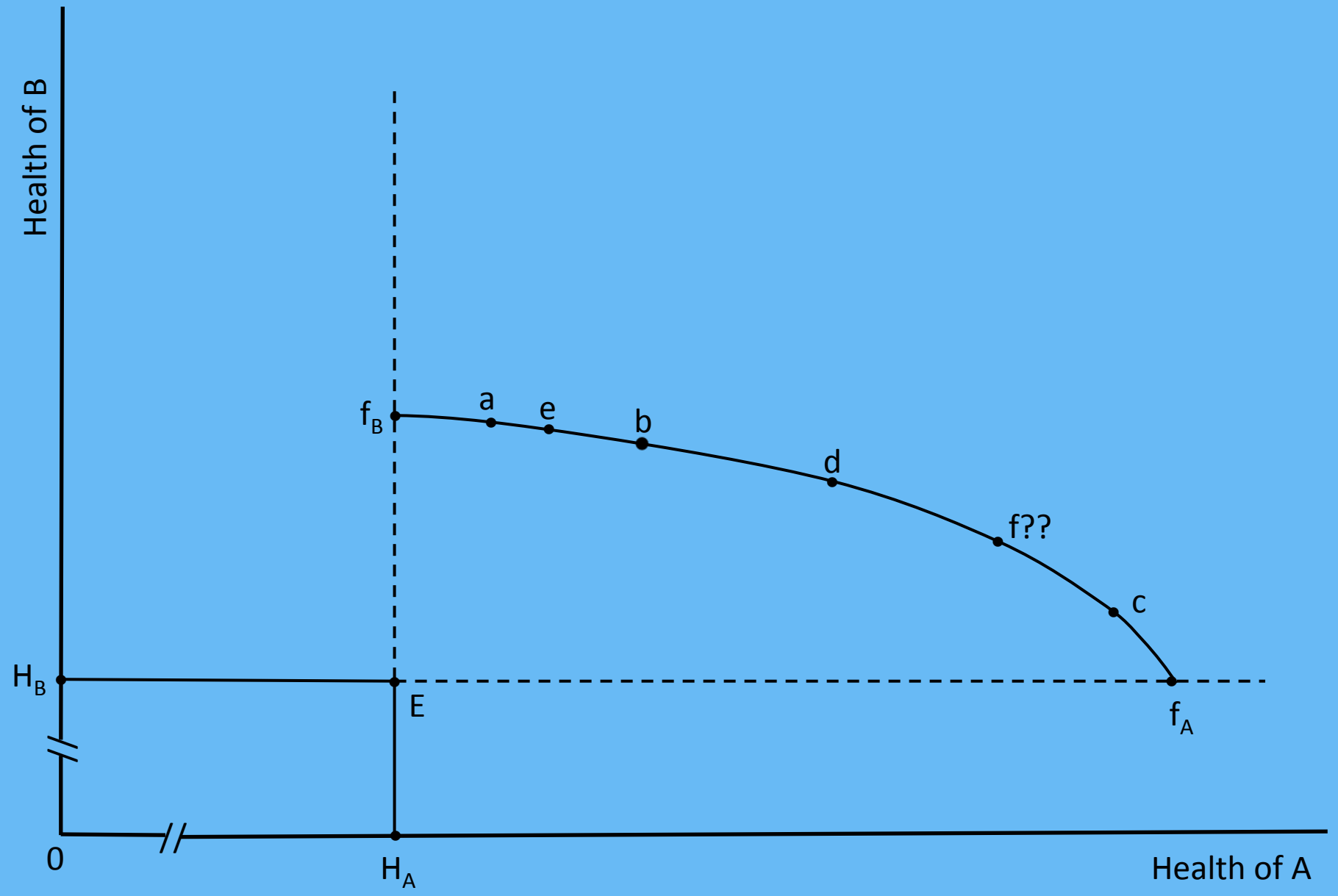

Main (qualitative) messages

- Definitions matter – both of efficiency and of equity.
- Efficiency (in the conventional Paretian sense) and common equity principles are not in inherent conflict
- Common equity principles are, however, in mutual conflict
- When burden and capacity to benefit are heterogeneous, horizontal and vertical equity rules can generate very different distributions of health
- Equity principles must be discussed and (if possible) agreed
- Removing avoidable ill-health/mortality and promoting greater health equality requires *equitable inequality* in resource distribution
- Greater health equality requires discrimination in favour of people in the poorest health and with the highest capacity to benefit
- To achieve that *and efficiency* in any jurisdiction requires that only the most cost-effective interventions for that jurisdiction's equity targets are used

Main reference

A J Culyer, A Wagstaff. "Equity and equality in health and health care", *Journal of Health Economics*, 1993, **12**: 431-457 (reprinted in N Barr (ed.) *Economic Theory and the Welfare State*, Cheltenham: Edward Elgar, 2001, 231-257 and in A J Culyer (Ed.) *Health Economics: Critical Perspectives on the World Economy,* London: Routledge, 2006, 483-509).